K-PRESS, LEAD FREE** BRASS BALL VALVE PRESS FIT

Two Piece Body • Full Port • Chrome Plated Ball • Blowout Proof Stem • PTFE Seats • Adjustable Stem Packing

NSF*

CODE # 801XL

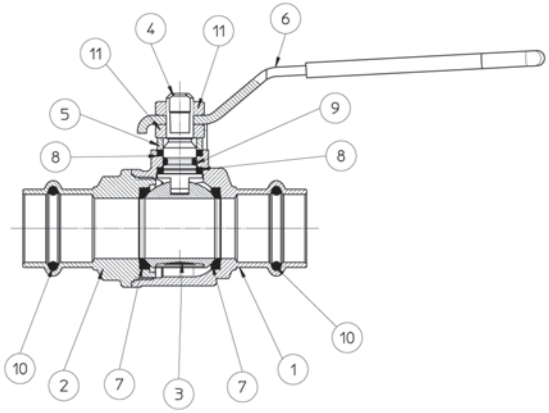

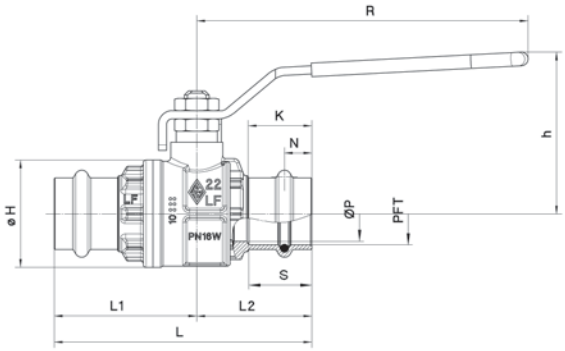

VALVE FEATURES

Full port ball valve with PRESS connections from 1/2" - 2", steel handle, white grip.

- 600 WOG† body rating with 200 WOG press fit rating.
- Temperature to 250ºF.
- Blow out proof stem, chrome plated brass ball.
- PTFE seats, seals and thrust washer.
- Recommended for service in the full open or full closed position.
- Adjustable stem packing.
- 100% tested in the open and closed position at 80 PSI.

† Valves shall not be used at pressures exceeding the press fit rating

MATERIAL LIST

NO.	NAME OF PART	SPECIFICATION
1	BODY	BRASS CW 511L
2	END CONNECTION	BRASS CW 511L
3	BALL	BRASS CW 510L
4	STEM	BRASS CW 510L
5	PACKING GLAND	BRASS CW 614N
6	HANDLE	STEEL
7	BALL SEAT	PTFE
8	STEM SEAL/THRUST WASHER	PTFE
9	O-RING	NBR
10	O-RING	EPDM
11	NUT	STEEL CL 04

* UL certified to ANSI NSF 61-G

** Lead free refers to the wetted surface of pipe, fittings and fixtures in potable water systems that have a weighted average lead content = 0.25%.

(Source: California Health & Safety Code (116875). Vermont Act 193)

CLASSIFIED UL WATER QUALITY

Acc. to NSF 61 Up to 2"

DIMENSIONS • WEIGHTS • QUANTITIES

		ØP	Q	K	N	ØH	L	L1	L2	h	R	Lbs.
in	1/2	0.59	0.71	0.67	0.31	1.30	2.99	1.71	1.30	1.89	3.78	0.48
mm		15.0	18.0	17.0	7.9	33.0	75.9	43.4	33.0	48.0	96.0	
in	3/4	0.79	0.91	0.83	0.39	1.57	3.50	1.93	1.57	2.32	4.76	0.85
mm		20.1	23.1	21.1	9.9	39.9	88.9	49.0	39.9	58.9	120.9	
in	1	0.98	0.94	0.83	0.39	1.93	3.92	2.19	1.73	2.48	4.76	1.24
mm		24.9	23.9	21.1	9.9	49.0	99.6	55.6	43.9	63.0	120.9	
in	1 1/4	1.26	1.02	0.83	0.39	2.32	4.23	2.30	1.93	2.99	5.94	2.01
mm		32.0	25.9	21.1	9.9	58.9	107.4	58.4	49.0	75.9	150.9	
in	1 1/2	1.57	1.42	1.02	0.49	2.87	5.33	2.78	2.56	3.25	5.94	3.34
mm		39.9	36.1	25.9	12.4	72.9	135.4	70.6	65.0	82.6	150.9	
in	2	1.95	1.57	1.26	0.59	3.43	6.28	3.30	2.98	3.78	6.30	5.61
mm		49.5	39.9	32.0	15.0	87.1	159.5	83.8	75.7	96.0	160.0	

KITZ®