KITZCorporation Of America
800-772-0073 • www.KITZ.com

Cast Carbon Steel Gate Valve
Design - API 600, OS&Y, BB, Flex Wedge, RFF per B16.5, BW per B16.25,
LEV - 100 PPM max., Body Materials - ASTM A216, A217, A352

Class 300 Cast Carbon Steel Gate Valve

Bolted bonnet, Outside screw-and-yoke, Rising stem, Non-rising handwheel, Flexible wedge.

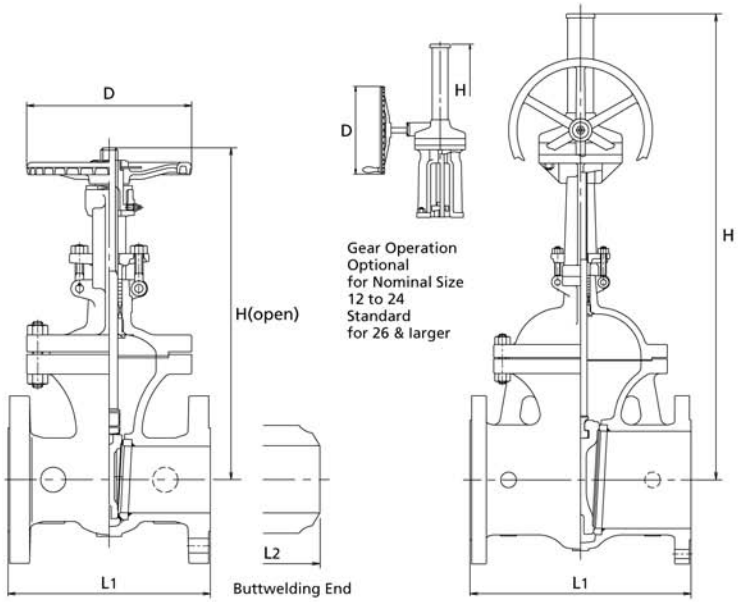

300SCLS G-300SCLS

Fig	End Connections
300SCLS	RF-flanged ends.
W300SCLS	Butt-welding ends.

Standard materials of parts

Parts	Materials
Body	ASTM A216 Gr.WCB
Bonnet	ASTM A216 Gr.WCB
Stem	ASTM A182 Gr.F6a
Disc	13Cr/Carbon Steel+13Cr
Body seat ring	Carbon Steel+HF*
Gland	ASTM A182 Gr.F6a
Gland packing	Flexible Graphite
Gland flange	ASTM A105/A216 Gr. WCB
Handwheel	Ductile iron
Gasket	See Page 6
Bonnet bolt/nut	ASTM A193 Gr.B7/A194 Gr.2H
Gland bolt/nut	ASTM A576 Gr.1045/A194 Gr.2H
Bonnet bushing	ASTM A182 Gr.F6a
Yoke sleeve	ASTM A439 Tp.D2
Grease nipple	Carbon steel

*Hard facing with Co-Cr-W Alloy.
Note: Refer to Page 3&6 for standard seat material and construction.

Dimensions

Nominal Size		1½	2	2½	3	4	5	6	8	10	12	14	16	18	20	22	24	26	28	30	32	34	36
		40	50	65	80	100	125	150	200	250	300	350	400	450	500	550	600	650	700	750	800	850	900
L1	in	7.50	8.50	9.50	11.14	12.00	15.00	15.86	16.50	18.00	19.76	30.00	33.00	36.00	39.00	43.00	45.00	49.00	53.00	55.00	60.00	64.00	68.00
	mm	190	216	241	283	305	381	403	419	457	502	762	838	914	991	1092	1143	1245	1346	1397	1524	1626	1727
L2	in	—	8.50	9.50	11.14	12.00	15.00	15.86	16.50	18.00	19.76	30.00	33.00	36.00	39.00	43.00	45.00	49.00	53.00	55.00	60.00	64.00	68.00
	mm	—	216	241	283	305	381	403	419	457	502	762	838	914	991	1092	1143	1245	1346	1397	1524	1626	1727
H	in	16.2	16.2	17.9	20.8	24.1	27.2	31.1	39.9	47.8	56.6	61.5	68.1	76.0	84.1	93.1	100	112.1	124.1	131.5	137.8	150.6	154.6
	mm	411	411	454	528	613	692	790	1013	1215	1437	1561	1729	1931	2137	2364	2540	2848	3151	3341	3500	3826	3926
D	in	7.9	7.9	7.9	9.8	9.8	11.8	13.8	15.7	17.7	19.7	23.6	23.6	26.8	29.9	29.9	35.8	23.6	23.6	23.6	23.6	23.6	23.6
	mm	200	200	200	250	250	300	350	400	450	500	600	600	680	760	760	910	600	600	600	600	600	600